Tapered Poles-BK Range

TP-BK06 -- Rev.2

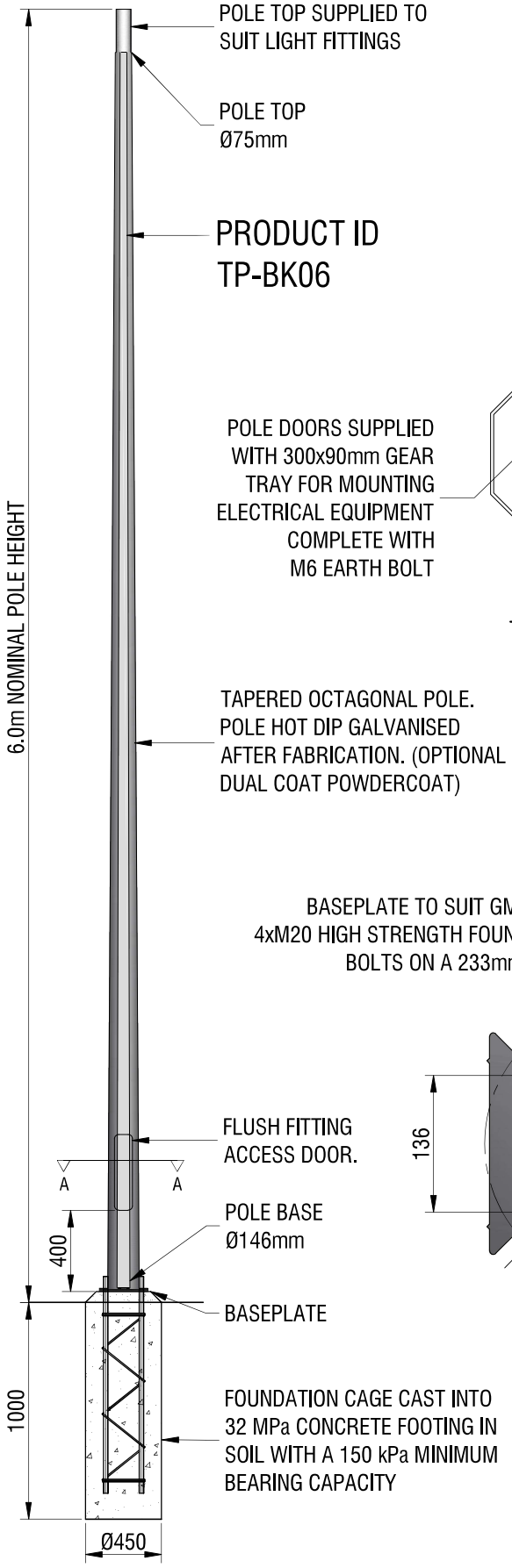

POLE DOORS SUPPLIED WITH 300x90mm GEAR TRAY FOR MOUNTING ELECTRICAL EQUIPMENT COMPLETE WITH M6 EARTH BOLT

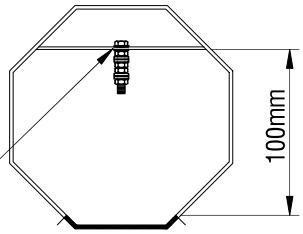

SECTION A-A

BASEPLATE TO SUIT GM POLES 4xM20 HIGH STRENGTH FOUNDATION BOLTS ON A 233mm P.C.D.

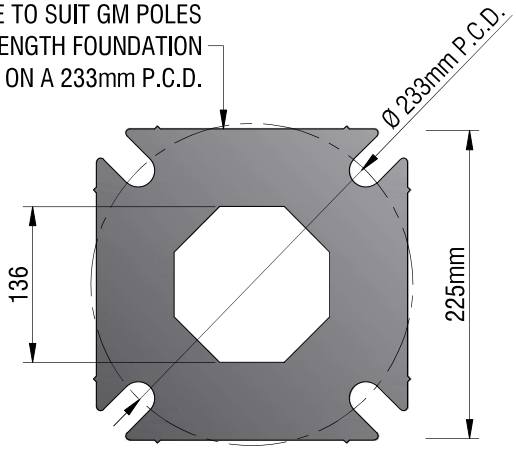

BASEPLATE

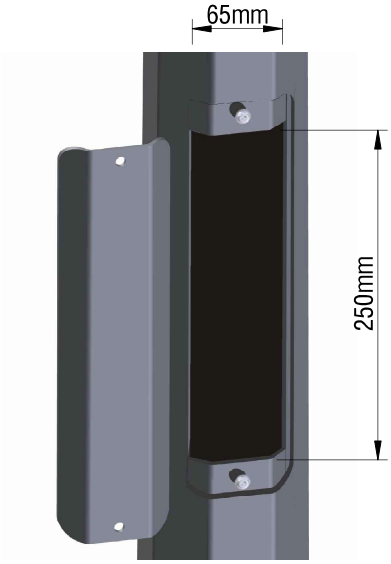

DOOR DETAIL

NOTES:

1. Poles are to be assembled and erected in accordance with GM Poles instructions by suitably qualified personnel. Contact GM Poles to take advantage of our installation service;
2. Footing guides based on assumed soil conditions (provided for cost estimate purposes) are available prior to placing an order. Contact GM Poles for certified footing designs to suit actual soil conditions;
3. Poles can be supplied with either a complete foundation cage, ready to place in an excavated footing or foundation bolts to be tied into a foundation cage supplied by others;
4. Footings must be constructed in accordance with Australian standards and GM Poles procedures. Contact GM Poles to take advantage of our footing installation service;